THIS DRAWING OWNED BY CHENTRONICS. IT IS CONDITIONALLY LOANED AND IS TO BE RETURNED UPON REQUEST. THE BORROWER BY RECEIVING IT HAS AGREED NOT TO REPRODUCE NOR COPY IT IN WHOLE OR IN PART NOR TO FURNISH INFORMATION FROM IT TO OTHERS NOR TO MAKE ANY USE OF IT THAT IS OR MAY BE INJURIOUS TO CHENTRONICS. FOR MORE INFORMATION, PLEASE CONTACT CHENTRONICS AT +1.607.334.5531.

iScan®3
Flame Scanner

KEEP THIS MANUAL IN A SAFE PLACE

FOR FUTURE REFERENCE

READ THIS MANUAL BEFORE USING THIS PRODUCT. FAILURE TO FOLLOW THE INSTRUCTIONS AND SAFETY PRECAUTIONS IN THIS MANUAL CAN RESULT IN SERIOUS INJURY, DEATH, OR DAMAGE TO EQUIPMENT.

THIS DRAWING OWNED BY CHENTRONICS. IT IS CONDITIONALLY LOANED AND IS TO BE RETURNED UPON REQUEST. THE BORROWER BY RECEIVING IT HAS AGREED NOT TO REPRODUCE NOR COPY IT IN WHOLE OR IN PART NOR TO FURNISH INFORMATION FROM IT TO OTHERS NOR TO MAKE ANY USE OF IT THAT IS OR MAY BE INJURIOUS TO CHENTRONICS. FOR MORE INFORMATION, PLEASE CONTACT CHENTRONICS AT +1.607.334.5531.

Contents

1.0 Important Safety Information 3
2.0 Product Features 5
2.1 Ease of Installation 5
2.2 Thermal Protection 7
3.0 Technical Specifications 7
3.1 Definitions 7
3.2 Specification Table 8
4.0 Wiring Instructions 10
4.1 Wiring Diagram 11
4.2 Cable Connection 14
4.3 Power/Control Cable Installation 14
4.4 Locking Nut Installation 15
4.5 Communications Wiring 16
4.6 "Daisy Chain" Configuration 17
4.7 "Split or Y Chain" Configuration 18
4.8 Remote File Select 19
5.0 Sighting The Scanner 20
5.1 Ring of Light Scanner Status Display 21
5.2 Cleaning the Lens 22
6.0 Warranty Instructions 22
7.0 Maintenance and Special, "X," Conditions of Use 22
8.0 Technical Support 22

THIS DRAWING OWNED BY CHENTRONICS. IT IS CONDITIONALLY LOANED AND IS TO BE RETURNED UPON REQUEST. THE BORROWER BY RECEIVING IT HAS AGREED NOT TO REPRODUCE NOR COPY IT IN WHOLE OR IN PART NOR TO FURNISH INFORMATION FROM IT TO OTHERS NOR TO MAKE ANY USE OF IT THAT IS OR MAY BE INJURIOUS TO CHENTRONICS. FOR MORE INFORMATION, PLEASE CONTACT CHENTRONICS AT +1.607.334.5531.

1.0 Important Safety Information

Read All Instructions Before Using Equipment

The instructions in this manual serve as a general guide. It is intended for use by qualified personnel with knowledge of equipment of this type. It is not intended to cover all possible variations in equipment or to provide for specific operating problems which may arise.

You are responsible for adhering to all warnings or cautions provided in this manual.

In addition to any general safety measures provided in this manual, you must comply with all national, state, local, and company safety regulations.

Safety Symbols used in this manual comply with ISO 3864.

THESE SYMBOLS INDICATE POTENTIAL PERSONAL INJURY HAZARDS.

OBEY ALL SAFETY MESSAGES THAT FOLLOW THESE SYMBOLS TO AVOID POSSIBLE INJURY OR DEATH.

⚠ DANGER — **Indicates a hazard with a high level of risk, which, if not avoided, will result in death or severe injury.**

⚠ WARNING — **Indicates a hazard with a medium level of risk, which, if not avoided, could result in death or severe injury.**

⚠ CAUTION — **Indicates a hazard with a low level of risk, which, if not avoided, will result in minor or moderate injury.**

THIS DRAWING OWNED BY CHENTRONICS. IT IS CONDITIONALLY LOANED AND IS TO BE RETURNED UPON REQUEST. THE BORROWER BY RECEIVING IT HAS AGREED NOT TO REPRODUCE NOR COPY IT IN WHOLE OR IN PART NOR TO FURNISH INFORMATION FROM IT TO OTHERS NOR TO MAKE ANY USE OF IT THAT IS OR MAY BE INJURIOUS TO CHENTRONICS. FOR MORE INFORMATION, PLEASE CONTACT CHENTRONICS AT +1.607.334.5531.

DANGER

EXPLOSION HAZARD

Do not open the equipment cover or service the equipment if an explosive atmosphere may be present. Equipment must be installed and serviced by qualified personnel by local and national codes, standards, and ordinances.

Lisez toutes les instructions avant d'utiliser l'équipement

Les instructions fournies dans ce manuel ont été préparées pour servir de guide général. Il est destiné à être utilisé par du personnel qualifié connaissant l'équipement de ce type. Il n'est pas destiné à couvrir toutes les variations possibles d'équipement ni à régler les problèmes de fonctionnement spécifiques qui peuvent survenir.

Vous êtes responsable du respect de tous les avertissements ou mises en garde fournis dans ce manuel.

En plus des mesures de sécurité générales fournies dans ce manuel, vous devez respecter à tout moment toutes les réglementations de sécurité nationales, locales et de l'entreprise.

Les symboles de sécurité utilisés dans ce manuel sont conformes à la norme ISO 3864.

CES SYMBOLES SONT UTILISÉS POUR VOUS AVERTIR DES RISQUES DE BLESSURES POTENTIELS.
RESPECTEZ TOUS LES MESSAGES DE SÉCURITÉ QUI SUIVENT CES SYMBOLES POUR ÉVITER LES BLESSURES POTENTIELLES OU LA MORT.

THIS DRAWING OWNED BY CHENTRONICS. IT IS CONDITIONALLY LOANED AND IS TO BE RETURNED UPON REQUEST. THE BORROWER BY RECEIVING IT HAS AGREED NOT TO REPRODUCE NOR COPY IT IN WHOLE OR IN PART NOR TO FURNISH INFORMATION FROM IT TO OTHERS NOR TO MAKE ANY USE OF IT THAT IS OR MAY BE INJURIOUS TO CHENTRONICS. FOR MORE INFORMATION, PLEASE CONTACT CHENTRONICS AT +1.607.334.5531.

DANGER — **Indique un danger avec un niveau élevé de risque qui, s'il n'est pas évité, entraînera la mort ou des blessures graves.**

WARNING — **Indique un danger avec un niveau de risque moyen qui, s'il n'est pas évité, pourrait entraîner la mort ou des blessures graves.**

CAUTION — **Indique un danger avec un niveau de risque bas qui, s'il n'est pas évité, entraînera des blessures mineures ou modérées.**

DANGER

RISQUE D'EXPLOSION

N'ouvrez pas le capot de l'équipement et ne le réparez pas si une atmosphère explosive peut être présente. L'équipement doit être installé et entretenu par du personnel qualifié conformément aux codes, normes et ordonnances locales et nationales applicables

2.0 Product Features

The iScan3 flame scanner is designed to detect flame from a variety of fuels. The iScan3 consists of an integrated viewing head and signal processor. No secondary signal processor or amplifier is required.

2.1 Ease of Installation

QUICK-CONNECT BURNER MOUNT:

The simple cam-and-groove mechanism allows for quick mounting, release, and rotation of the scanner.

Figure 1: PN: 04005000-SB/ MB/ SB-4

THIS DRAWING OWNED BY CHENTRONICS. IT IS CONDITIONALLY LOANED AND IS TO BE RETURNED UPON REQUEST. THE BORROWER BY RECEIVING IT HAS AGREED NOT TO REPRODUCE NOR COPY IT IN WHOLE OR IN PART NOR TO FURNISH INFORMATION FROM IT TO OTHERS NOR TO MAKE ANY USE OF IT THAT IS OR MAY BE INJURIOUS TO CHENTRONICS. FOR MORE INFORMATION, PLEASE CONTACT CHENTRONICS AT +1.607.334.5531.

LED STATUS INDICATORS; "Ring of Light":

The iScan®3 Flame Scanner provides visual feedback on flame conditions and system health with a bright LED display.

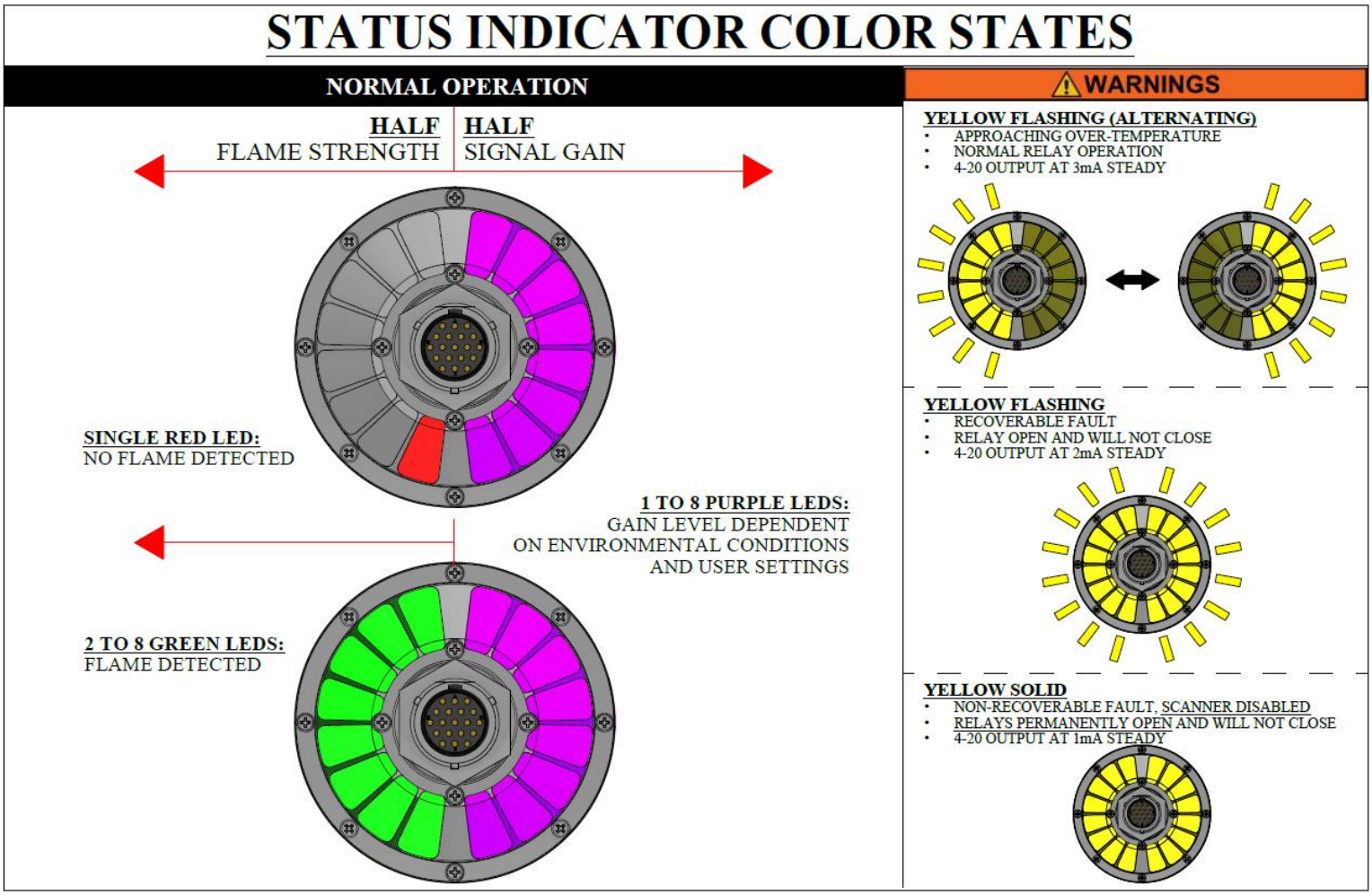

Figure 2: LED Status indicator

The "Ring of Light" communicates the scanner's operating modes, including FLAME SIGNAL STRENGTH, GAIN LEVEL (the amount of signal amplification), and WARNINGS/FAULTS. This ring aids with "sighting" the flame, or in other words: proper aiming of the scanner. This must be done carefully to ensure a good flame signal is present over various operating conditions. With the "Ring of Light," the operator can quickly recognize marginal conditions (such as low flame strength and/or high gain).

THIS DRAWING OWNED BY CHENTRONICS. IT IS CONDITIONALLY LOANED AND IS TO BE RETURNED UPON REQUEST. THE BORROWER BY RECEIVING IT HAS AGREED NOT TO REPRODUCE NOR COPY IT IN WHOLE OR IN PART NOR TO FURNISH INFORMATION FROM IT TO OTHERS NOR TO MAKE ANY USE OF IT THAT IS OR MAY BE INJURIOUS TO CHENTRONICS. FOR MORE INFORMATION, PLEASE CONTACT CHENTRONICS AT +1.607.334.5531.

REMOTE FILE SELECT

The Remote File Select feature provides a means for selecting one of the configuration files within the scanner. Single-Burner, "SB," models have limited programmability, while Multi-Burner, "MB" models have a high degree of programmability, as outlined in the table below.

Scanner PN	USER PROGRAMMABLE FEATURES (with iScan Software)						
	4-20 mA Signal Mapping	4-20 mA Calibrate	4-20 mA Gain	Secondary Relay: Redundant Flame N.O. or N.C. -or- Fault N.O. or N.C.	Detection Settings: Gain, Freq, Threshold	Multiple Files Select (Max of 4)	Response Times (Flame On/ Flame Off)
04005000-SB	YES	YES	YES	YES	NO	NO	NO
04005000-SB-4	YES	YES	YES	YES	NO	NO	NO
04005000-MB	YES	YES	YES	YES	YES	YES	YES

2.2 Thermal Protection

The iScan®3 Flame Scanner has redundant safety features for exposure above the maximum temperature rating. The modes of operation are described below:

Mode	Internal Temperature (T_{INT})	4-20 Output Setting	Indicator Light Setting	Relay Operation
Normal	$T_{INT} \leq 95°C$	Normal (4-20 mA)	Normal	Normal
Warning	$95°C < T_{INT} < 100°C$	3mA steady	Alternate left half yellow 0.5s / right half yellow 0.5s	Normal
Fault	$100°C < T_{INT} \leq 105°C$	2mA steady	Blink yellow 0.5s on 0.5s off	Relays Open and will not Close
Disable	$T_{INT} > 105°C$	1mA steady	Yellow Solid	Relays **Permanently** Open and will not Close

3.0 Technical Specifications

3.1 Definitions

FLICKER – Flicker or Flicker Frequency refers to the modulation of flame intensity due to micro-explosions.

FDORT – *Flame Detector ON Response Time* **–** the period of time from flame intensity rising above the user-adjustable threshold to flame relay contacts closed.

FDRT – *Flame Detector Response Time* **–**the period of time between the loss of a sensed flame and the signal indicating the absence of flame.

MFFRT – *Marginal Flame Fail Response Time* **–** period of time from flame intensity falling below the user adjustable threshold to the flame relay contacts open.

ROL – *Ring of Light* **–** multi-colored LED status indication on the back of the scanner.

iScan Software – Flame scanner communications software is used to monitor and configure the iScan®3 Flame Scanner.

THIS DRAWING OWNED BY CHENTRONICS. IT IS CONDITIONALLY LOANED AND IS TO BE RETURNED UPON REQUEST. THE BORROWER BY RECEIVING IT HAS AGREED NOT TO REPRODUCE NOR COPY IT IN WHOLE OR IN PART NOR TO FURNISH INFORMATION FROM IT TO OTHERS NOR TO MAKE ANY USE OF IT THAT IS OR MAY BE INJURIOUS TO CHENTRONICS. FOR MORE INFORMATION, PLEASE CONTACT CHENTRONICS AT +1.607.334.5531.

GAIN – When a signal is amplified, GAIN is the ratio of the amplified signal relative to the original.

DISCRIMINATION – The ability to distinguish between multiple flames. An example of good discrimination is when the MB scanner is able to recognize a pilot flame with another burner's main fuel flame in the background. The status of the background Flames does not affect the ability to detect the pilot flame (ON or OFF).

3.2 Specification Table

Part Number(s)	**PN 04005000-SB, 04005000-MB, 04005000-SB-4**
Area Classification for PN (s) 04005000-SB and 04005000-MB	**APPROVED CERTIFICATIONS** Intertek 3079125 USA: CLASS I DIVISION 2 GROUPS ABCD T4 CLASS I ZONE 2 GROUP IIC T4 CLASS I ZONE 2 AEx ec nC IIC Gc T4 IP66 CAN: CLASS I DIVISION 2 GROUPS ABCD T4 CLASS I ZONE 2 GROUP IIC T4 Ex ec nC IIC Gc T4 IP66 SPECIAL CONDITION: X AMBIENT TEMPERATURE :-40°C to +80°C TYPE 4X SIL3 IECEx: Ex ec nC IIC T4 Gc IP66 -40°C to +80°C IECEx ETL 19.0011X 2903 2797: II 3 G Ex ec nC IIC T4 Gc IP66 -40°C ≤ Ta ≤ 80°C ITS19ATEX14547X Segurança INMETRO OCP 0034 Ex ec nC IIC T4 Gc IP66 (-40°C ≤ Tamb ≤ +80°C) NCC 20.0077X TESTED PER THE FOLLOWING STANDARDS: USA» UL 60730-1, UL 60730-2-5, UL 121201, ANSI Z21.20, UL 60079-0, UL 60079-7, UL 60079-15 CANADA» CSA C22.2#213, CSA E60730-1, CSA C22.2#60730-2-5, CSA C22.2#60079-0, CSA C22.2#60079-7, CSA C22.2#60079-15 IEC» IEC 60079-0, IEC 60079-7, IEC 60079-15 EUROPE» EN 60730-1, EN 60730-2-5, EN IEC 60079-0, EN IEC 60079-7, EN 60079-15, EN 298 BRAZIL» ABNT NBR IEC 60079-0, ABNT NBR IEC 60079-7, ABNT NBR IEC 60079-15
Area Classification for PN 04005000-SB-4	**APPROVED CERTIFICATIONS** Intertek 3079125 USA: CLASS I DIVISION 2 GROUPS ABCD T4 CLASS I ZONE 2 GROUP IIC T4 CLASS I ZONE 2 AEx ec nC IIC Gc T4 IP66 CAN: CLASS I DIVISION 2 GROUPS ABCD T4 CLASS I ZONE 2 GROUP IIC T4 Ex ec nC IIC Gc T4 IP66 SPECIAL CONDITION: X AMBIENT TEMPERATURE :-40°C to +80°C TYPE 4X SIL3 TESTED PER THE FOLLOWING STANDARDS: USA» UL 60730-1, UL 60730-2-5, UL 121201, ANSI Z21.20, UL 60079-0, UL 60079-7, UL 60079-15 CANADA» CSA C22.2#213, CSA E60730-1, CSA C22.2#60730-2-5, CSA C22.2#60079-0, CSA C22.2#60079-7, CSA C22.2#60079-15
Input Cable	Quick Disconnect - Separate Cable
Weight	2.25 lb. (1.02 kg)
Mounting	1" NPT
Purge Air NOTE 1 **FlowPressure**	5 scfm (8.5 Nm^3/hr) 5" w.c. (13 mbar)
ROL - Ring of Light Status Indicator	Color Coded Status
Field of View	6 Degrees

RELATED DOCUMENT – MUST COMPLY WITH SCHEDULE DOCUMENT(S): CERT-iS3 MNL, CDM-10000105, 106, 107, 108, 109, 110, 113, 119, 167

THIS DRAWING OWNED BY CHENTRONICS. IT IS CONDITIONALLY LOANED AND IS TO BE RETURNED UPON REQUEST. THE BORROWER BY RECEIVING IT HAS AGREED NOT TO REPRODUCE NOR COPY IT IN WHOLE OR IN PART NOR TO FURNISH INFORMATION FROM IT TO OTHERS NOR TO MAKE ANY USE OF IT THAT IS OR MAY BE INJURIOUS TO CHENTRONICS. FOR MORE INFORMATION, PLEASE CONTACT CHENTRONICS AT +1.607.334.5531.

Optics	Quartz Lens
Sensor Type	Solid-State
Sensor Range	300 nm to 750 nm
Communication	USB/RS485: up to 127 scanners, overall length up to a distance of 4000 Ft. (1200 M).
Temperature	-40°C to 80°C
Humidity	0 to 100% Relative Humidity, Condensing
Input Power NOTE 2	24 VDC, +10%/-15%, 5.28 W (220 mA MAX)
Relay Contacts NOTE 3	Primary Relay with Normally Open and Normally Closed Voltage Free Contacts (i.e., NO contact closes when a flame is detected, NC opens when a flame is detected) Secondary Relay with Voltage-Free Contacts (configurable as NO Flame Relay or Fault Relay configurable as NO or NC contacts) 0.250A @ 125 VAC Resistive Load 1.0 A @ 24 VDC Resistive Load 0.5 A @ 48 VDC Resistive Load
Signal Output NOTES 4,5	Output #1, 4–20 mA, Flame Signal Output # 2, 4-20 mA, Selectable as Gain or Internal Temperature Maximum Current Loop Resistance = 750 ohms
FDORT (FLAME ON)	SUFFIX -MB Configurable from 1-4 seconds in 1-second increments SUFFIX -SB Flame ON 1 second SUFFIX -SB-4 Flame ON 1 second
FDRT (FLAME OFF)	SUFFIX -MB Configurable from 1-4 seconds in 1-second increments SUFFIX -SB Flame ON 1 second SUFFIX -SB-4 Flame OFF 4 seconds
MFRRT	SUFFIX -MB Configurable from 1-6 seconds in 1-second increments SUFFIX -SB Flame OFF 1 second SUFFIX SB-4 Flame OFF 4 seconds
Safety Integrity Level (SIL3) Data	$PFD_{AVG} = 938.369 \times 10^{-6}$ $\lambda_{SU} = 1.14 \times 10^{-6}$ $\lambda_{DD} = 2.1705 \times 10^{-6}$ $\lambda_{DU} = 0.0219 \times 10^{-6}$ SFF = 99.1% Proof Test Interval time = 1 year (8760 Hrs) NOTE 6

THIS DRAWING OWNED BY CHENTRONICS. IT IS CONDITIONALLY LOANED AND IS TO BE RETURNED UPON REQUEST. THE BORROWER BY RECEIVING IT HAS AGREED NOT TO REPRODUCE NOR COPY IT IN WHOLE OR IN PART NOR TO FURNISH INFORMATION FROM IT TO OTHERS NOR TO MAKE ANY USE OF IT THAT IS OR MAY BE INJURIOUS TO CHENTRONICS. FOR MORE INFORMATION, PLEASE CONTACT CHENTRONICS AT +1.607.334.5531.

Technical Specification NOTES

Note 1 Purge air pressure is the minimum differential pressure required between the purge air supply pressure at "Y" (scanner connection) and the back pressure.

Note 2 24 VDC Power supply to iScan®3 Flame Scanner must not include any inductive load.

Note 3 To achieve higher relay contact voltages, use iScan®3 Flame Scanner relay contacts to energize the coil of an interstitial relay.

Note 4 Output for monitoring only. Not to be used to prove flame.

Note 5 4-20 mA outputs are calibrated at the factory to a known load. Monitoring hardware will have an impact on the current output. For accurate readings, 4-20 mA output(s) should be calibrated using a milli-ammeter between the scanner's 4-20 mA output and the monitoring hardware. For details on executing the calibration procedure, refer to the 4-20 mA settings section of **MNL-iScan Software**.

Note 6 SUGGESTED SIL3 PROOF TESTS:

An annual proof test is a good practice to meet the requirements of IEC61508. According to section 7.4.3.2.2 f of IEC61508, proof tests shall be undertaken to reveal dangerous faults that may be undetected by diagnostics.

Flame OFF: Shut down the burner and ensure the flame off condition is detected and signaled by the flame detector as a flame off condition.

False Flame: Verify that before start-up (no flame present), there is no indication of a flame on condition (false flame signal) on the flame scanner (this is typically integrated within the BMS as a pre-start permissive to prevent start-up if a false flame condition is detected. The BMS test should not be considered a replacement for recommended testing of the scanner adjustments, which must be verified each time the scanner is commissioned, adjusted, settings are changed, or re-commissioning takes place. In these cases, only qualified personnel who have been trained and are experienced should make such adjustments.

4.0 Wiring Instructions

All wiring shall be done per all applicable local and national codes, standards, and ordinances. The scanner has a quick connect cable. This cable does not require a flexible conduit if the local authority permits. **Connections for power, Earth Ground, and Flame Relay (N.O. and Common) are needed for all applications**. Use of the 4-20 mA outputs and Communication connections are "as required" for each application.

THIS DRAWING OWNED BY CHENTRONICS. IT IS CONDITIONALLY LOANED AND IS TO BE RETURNED UPON REQUEST. THE BORROWER BY RECEIVING IT HAS AGREED NOT TO REPRODUCE NOR COPY IT IN WHOLE OR IN PART NOR TO FURNISH INFORMATION FROM IT TO OTHERS NOR TO MAKE ANY USE OF IT THAT IS OR MAY BE INJURIOUS TO CHENTRONICS. FOR MORE INFORMATION, PLEASE CONTACT CHENTRONICS AT +1.607.334.5531.

4.1 Wiring Diagram

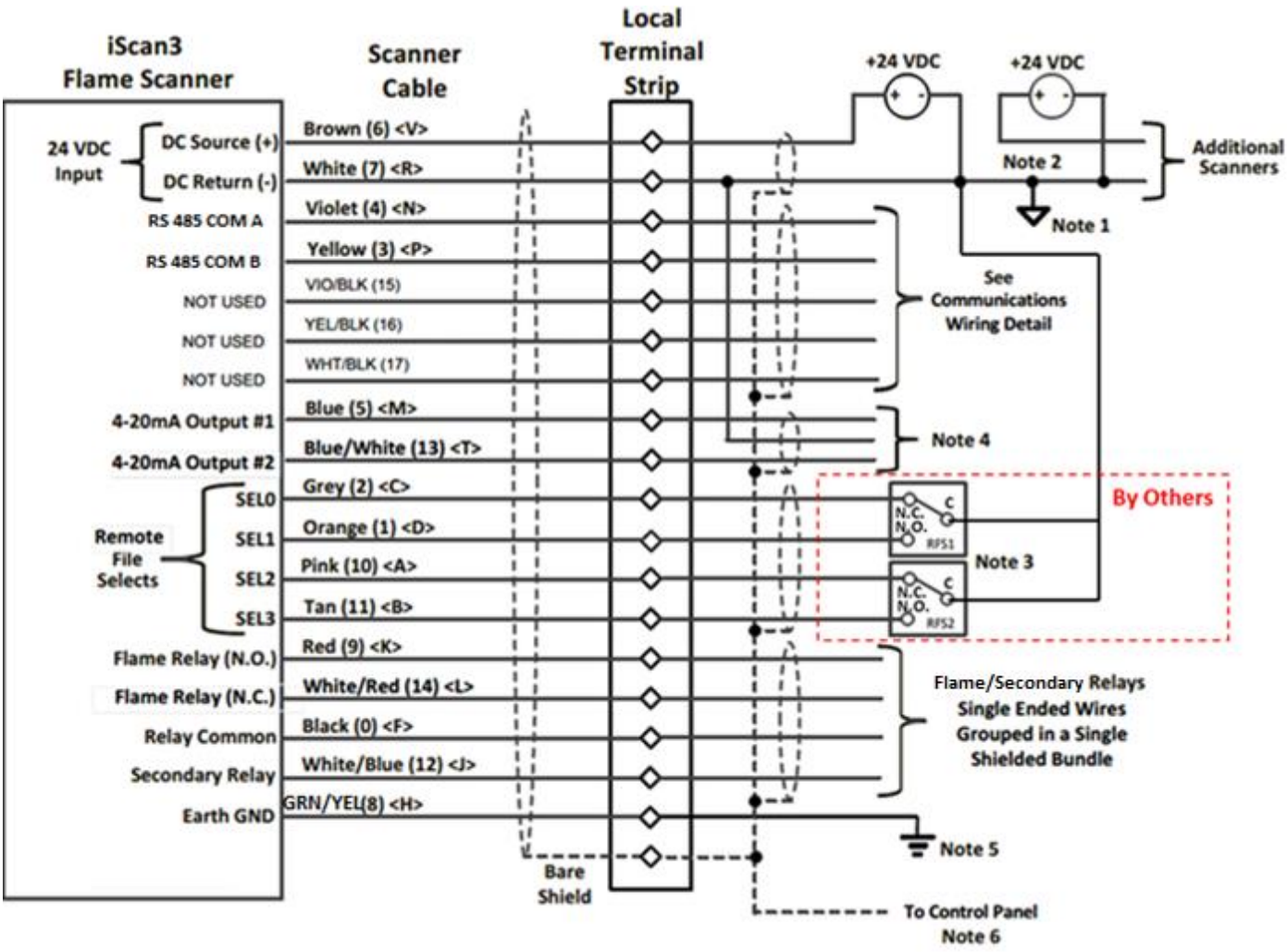

Figure 3: Wiring Diagram

Wiring Notes

Note 1 If more than one 24 VDC supply is required, the 24 VDC returns labeled as "DC (-)" shall be connected to each other.

Note 2 If more than one 24 VDC supply is required, the 24 VDC source connections labeled "DC (+)" shall be isolated from all other power supplies. If switching power supplies are used, the supplies may be connected via a wired OR diode configuration. NOTE: the BLOCKING DIODE

THIS DRAWING OWNED BY CHENTRONICS. IT IS CONDITIONALLY LOANED AND IS TO BE RETURNED UPON REQUEST. THE BORROWER BY RECEIVING IT HAS AGREED NOT TO REPRODUCE NOR COPY IT IN WHOLE OR IN PART NOR TO FURNISH INFORMATION FROM IT TO OTHERS NOR TO MAKE ANY USE OF IT THAT IS OR MAY BE INJURIOUS TO CHENTRONICS. FOR MORE INFORMATION, PLEASE CONTACT CHENTRONICS AT +1.607.334.5531.

must be rated for a minimum of 50 volts and 10 Amps. To achieve higher relay contact voltages, use iScan®3 Flame Scanner relay contacts to energize the coil of an interstitial relay.

Note 3 The 24 VDC return, "DC (-)," shall be used as the low side of the File Select relays.

Note 4 The 24 VDC return, "DC (-)," is the return for the 4–20 mA output loop(s). Input must be isolated type. The maximum current loop resistance is 750 ohms.

Note 5 Connect the scanner Earth GND (Green/Yellow, 8, <H>) to EARTH GROUND. A short-BRAIDED CONDUCTOR (alternately a short AWG #12 wire) is recommended.

Note 6 All shields are tied to Earth Ground in the Control Panel only.

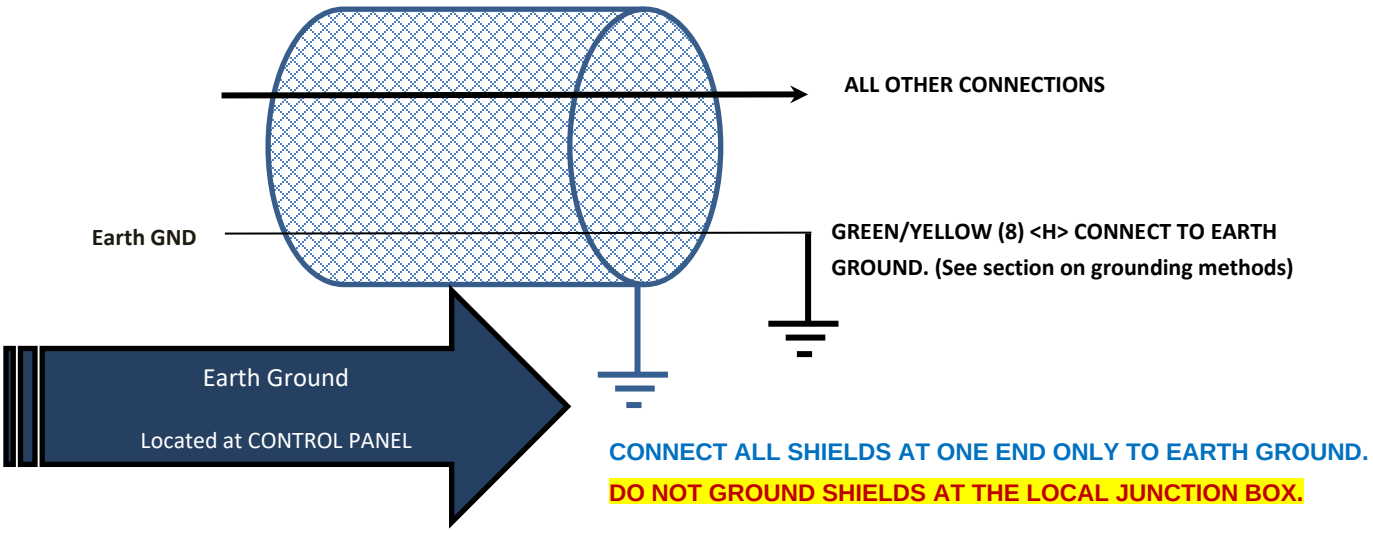

Figure 4: Earthing instructions

THIS DRAWING OWNED BY CHENTRONICS. IT IS CONDITIONALLY LOANED AND IS TO BE RETURNED UPON REQUEST. THE BORROWER BY RECEIVING IT HAS AGREED NOT TO REPRODUCE NOR COPY IT IN WHOLE OR IN PART NOR TO FURNISH INFORMATION FROM IT TO OTHERS NOR TO MAKE ANY USE OF IT THAT IS OR MAY BE INJURIOUS TO CHENTRONICS. FOR MORE INFORMATION, PLEASE CONTACT CHENTRONICS AT +1.607.334.5531.

⚠ CAUTION

- Electrical noise interference from high voltage/energy ignition sources can adversely affect the operation of the flame scanner. To minimize the possibility of electrical noise interfering with the operation of the flame scanner:
- Do **not** install ignition wires in the same conduit as the scanner wires.
- Ignition Systems shall have a dedicated return.
- Do **not** mount an ignition transformer in the same enclosure where the flame scanner wiring is terminated.
- Ignition cables shall be routed a minimum of 12” (305mm) from scanner wiring.
- IScan®3 Flame Scanner complies with IEC 61000-4-3 (RF Radiated Immunity).

⚠ CAUTION

- Les interférences électriques provenant de sources d'allumage haute tension / énergie peuvent nuire au bon fonctionnement du scanner à flamme. Pour minimiser les risques d'interférences électriques avec le fonctionnement du scanner à flamme:
- Ne pas installer les câbles d'allumage dans le même conduit que les câbles du scanner
- Les systèmes d'allumage doivent avoir un retour dédié
- Ne pas montez de transformateur d'allumage dans le même boîtier que le câblage du scanner à flamme
- Les câbles d’allumage doivent être acheminés à au moins 12 pouces (305 mm) du câblage du scanner en tout temps.
- iScan3 est conforme à la norme IEC 61000-4-3 (Immunité par rayonnement RF).

THIS DRAWING OWNED BY CHENTRONICS. IT IS CONDITIONALLY LOANED AND IS TO BE RETURNED UPON REQUEST. THE BORROWER BY RECEIVING IT HAS AGREED NOT TO REPRODUCE NOR COPY IT IN WHOLE OR IN PART NOR TO FURNISH INFORMATION FROM IT TO OTHERS NOR TO MAKE ANY USE OF IT THAT IS OR MAY BE INJURIOUS TO CHENTRONICS. FOR MORE INFORMATION, PLEASE CONTACT CHENTRONICS AT +1.607.334.5531.

4.2 Cable Connection

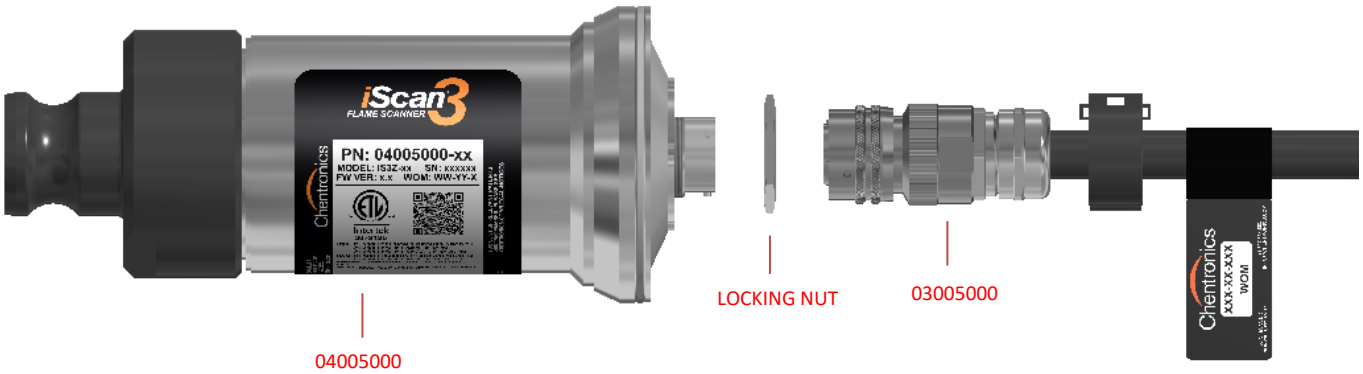

Figure 5: PN: 04005000-SB/ MB/ SB-4 with locking nut and I/o cable

4.3 Power/Control Cable Installation

The iScan®3 Flame Scanner system utilizes a quick disconnect connector to connect the power/control cable to the electronics.

To connect the power cable to the electronics, turn the locking nut clockwise by hand until it is seated against the electronics. This will ensure the locking nut is not too far out and allow the connector to properly seat. Then, align the connector on the cable with the connector on the electronics, insert the connector, and turn the outer barrel clockwise until the banjo fittings on the connector are seated and latched.

Figure 6: Clear the locking nut, then align and insert the cable connector.

THIS DRAWING OWNED BY CHENTRONICS. IT IS CONDITIONALLY LOANED AND IS TO BE RETURNED UPON REQUEST. THE BORROWER BY RECEIVING IT HAS AGREED NOT TO REPRODUCE NOR COPY IT IN WHOLE OR IN PART NOR TO FURNISH INFORMATION FROM IT TO OTHERS NOR TO MAKE ANY USE OF IT THAT IS OR MAY BE INJURIOUS TO CHENTRONICS. FOR MORE INFORMATION, PLEASE CONTACT CHENTRONICS AT +1.607.334.5531.

4.4 Locking Nut Installation

The equipment features a locking nut that locks the cable to the equipment so that it may not be removed without a tool. This feature is required for some hazardous area installations. To lock the connector in place, turn the locking nut *counter-clockwise* and tighten to a torque of 10ftlbs using a wrench. See Figure 7 and Figure 8 for illustrations of locking nut tightening. To remove the cable, turn the locking nut clockwise until it is seated against the electronics, then remove the cable connector by rotating the outer barrel counter-clockwise until the banjo fittings unseat and the connector can be removed.

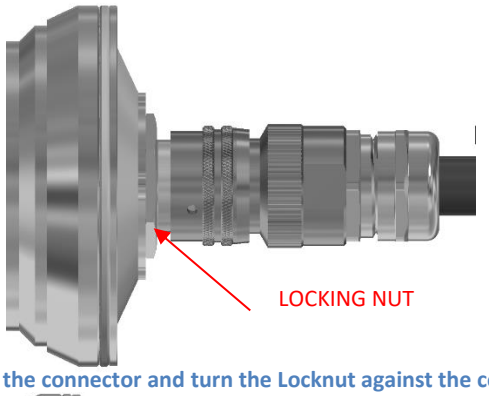

Figure 7: Seat the connector and turn the Locknut against the connector barrel.

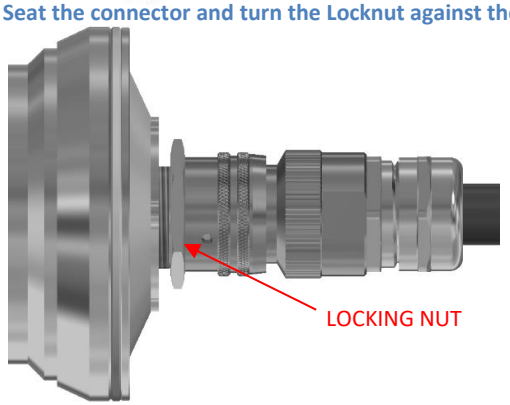

Figure 8: Tighten Locking nut against connector barrel

DANGER

EXPLOSION HAZARD

Do not connect or disconnect when energized

THIS DRAWING OWNED BY CHENTRONICS. IT IS CONDITIONALLY LOANED AND IS TO BE RETURNED UPON REQUEST. THE BORROWER BY RECEIVING IT HAS AGREED NOT TO REPRODUCE NOR COPY IT IN WHOLE OR IN PART NOR TO FURNISH INFORMATION FROM IT TO OTHERS NOR TO MAKE ANY USE OF IT THAT IS OR MAY BE INJURIOUS TO CHENTRONICS. FOR MORE INFORMATION, PLEASE CONTACT CHENTRONICS AT +1.607.334.5531.

DANGER

RISQUE D'EXPLOSION

Ne pas connecter ou débrancher lorsqué énérgé

4.5 Communications Wiring

RS-485

Communication with the iScan®3 Flame Scanner is RS-485 via a USB to RS-485 Converter (PN 3425-057-01). RS-485 is a differential multi-drop network. For iScan®3 Flame Scanner, the network is a half-duplex, 2-wire, echo-off configuration operating at 19200 KBAUD. The maximum allowable number of nodes on a given section of the network is 32, including the USB to RS-485 converter and any repeaters. If more than 32 loads are connected (1 USB converter, 1 RS-485 repeater, and 30 iScan3s), then an RS-485 repeater is required between sections to boost the signal. The repeater must be compatible with the EIA-485 standard, have input to output DC isolation, operate on 24VDC over the operating temperature range of 0°C to +70°C, and have agency approvals sufficient to meet the area classification.

NOTE: When calculating 32 loads, include the USB to RS-485 converter and the number of repeaters in a section). For the extended sections, up to 30 iScan3s may be connected. The maximum length of any given section is 4000 FT (1200 M).

B&B Electronics 485 repeater model 485OPDRI-PH meets these requirements. Additional repeaters may be added to extend the network to 127 scanners. If using the B&B Electronics 485 repeater model mentioned above, configure the DIP switches on ports as follows:

1	2	3	4	5	6	7	8
ON	ON	ON	ON	OFF	OFF	ON	OFF

Since there is no dedicated signal reference, the 24 VDC return labeled as DC (-) is used. The USB to RS-485 and the Repeaters must also have their GND terminals connected to the DC (-). Failure to provide the signal reference may result in communication errors and potentially damage the iScan®3 Flame Scanner.

The recommended topology is "Daisy Chain," as shown in the wiring diagrams below. A split or Y configuration is acceptable. **NO OTHER CONFIGURATION IS ACCEPTABLE**. Please refer to the EIA-485 specification for further information on RS-485 networks

THIS DRAWING OWNED BY CHENTRONICS. IT IS CONDITIONALLY LOANED AND IS TO BE RETURNED UPON REQUEST. THE BORROWER BY RECEIVING IT HAS AGREED NOT TO REPRODUCE NOR COPY IT IN WHOLE OR IN PART NOR TO FURNISH INFORMATION FROM IT TO OTHERS NOR TO MAKE ANY USE OF IT THAT IS OR MAY BE INJURIOUS TO CHENTRONICS. FOR MORE INFORMATION, PLEASE CONTACT CHENTRONICS AT +1.607.334.5531.

COMMUNICATION WIRING SUMMARY:

- Wiring must be twisted pair shielded cable. Ground the shield only at the control panel to prevent ground loops.
- Use only "Daisy Chain" or "Y" configurations. Connect all of the "Com A" wires together. Connect all of the "Com B" wires together. Make sure that the "Com A" and "Com B" wires are connected to the correct terminals on the converter.
- An RS-485 repeater is required for every 30 scanners or 4000 ft (1200 m) of length for a maximum of 127 scanners in a network.
- Ensure the DC (-) of all scanners are tied together as a reference for RS-485 communications. The GND terminal of the USB to RS-485 converter and the repeaters must also be connected to the DC (-) of the scanners.

4.6 "Daisy Chain" Configuration

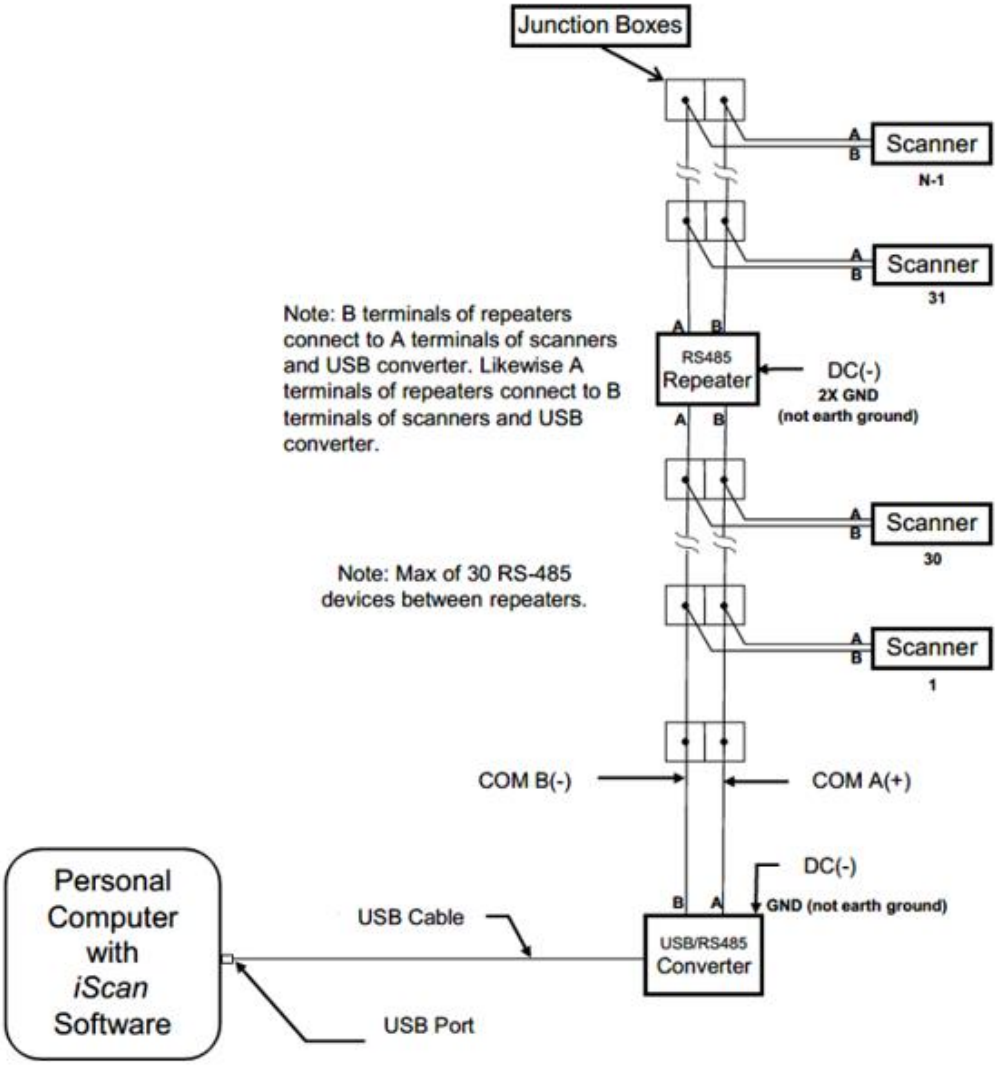

THIS DRAWING OWNED BY CHENTRONICS. IT IS CONDITIONALLY LOANED AND IS TO BE RETURNED UPON REQUEST. THE BORROWER BY RECEIVING IT HAS AGREED NOT TO REPRODUCE NOR COPY IT IN WHOLE OR IN PART NOR TO FURNISH INFORMATION FROM IT TO OTHERS NOR TO MAKE ANY USE OF IT THAT IS OR MAY BE INJURIOUS TO CHENTRONICS. FOR MORE INFORMATION, PLEASE CONTACT CHENTRONICS AT +1.607.334.5531.

4.7 "Split or Y Chain" Configuration

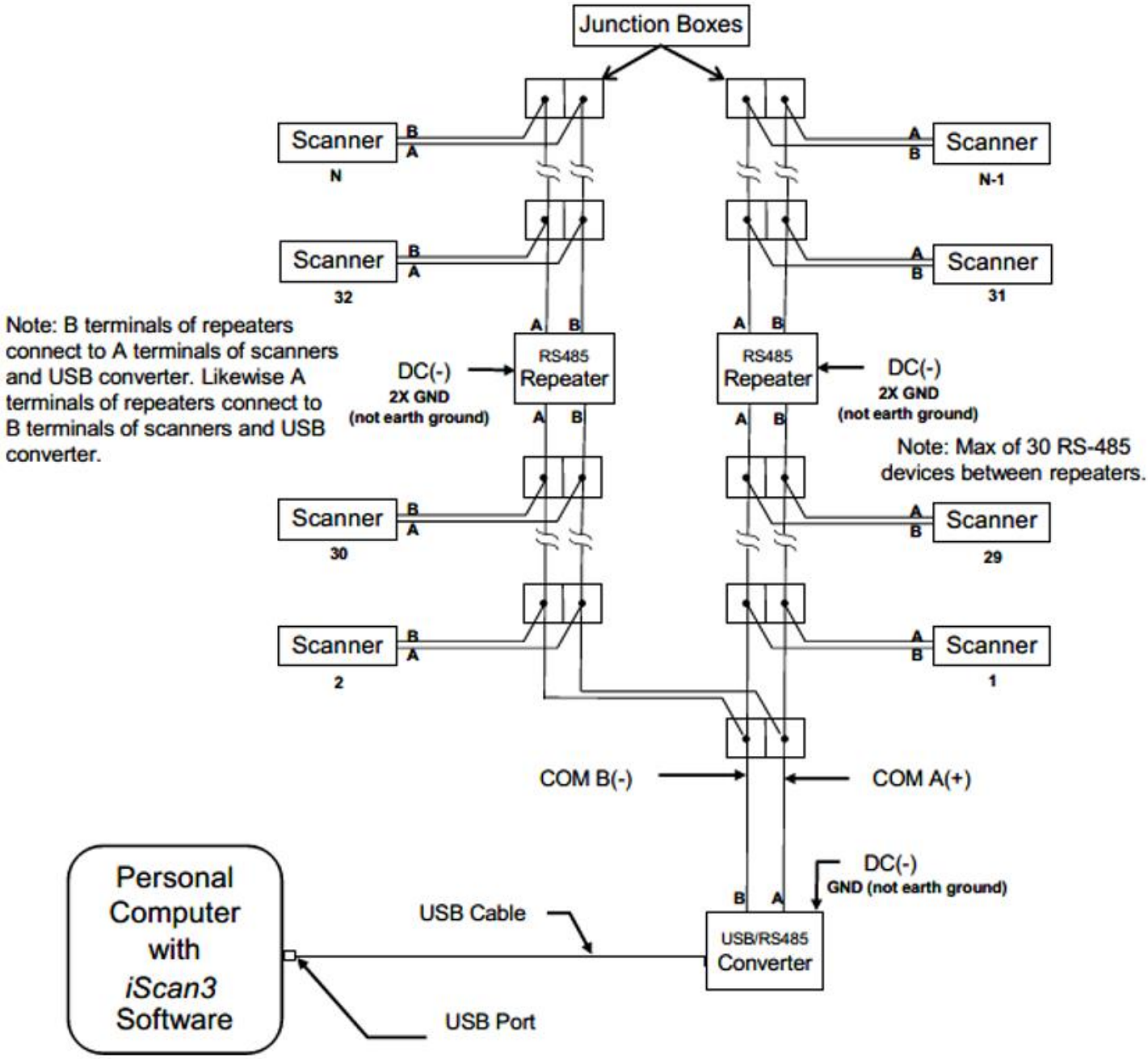

THIS DRAWING OWNED BY CHENTRONICS. IT IS CONDITIONALLY LOANED AND IS TO BE RETURNED UPON REQUEST. THE BORROWER BY RECEIVING IT HAS AGREED NOT TO REPRODUCE NOR COPY IT IN WHOLE OR IN PART NOR TO FURNISH INFORMATION FROM IT TO OTHERS NOR TO MAKE ANY USE OF IT THAT IS OR MAY BE INJURIOUS TO CHENTRONICS. FOR MORE INFORMATION, PLEASE CONTACT CHENTRONICS AT +1.607.334.5531.

4.8 Remote File Select

The Remote File Select feature provides a means for automatically selecting one of the configuration files resident within the scanner. IScan®3 Flame Scanner has a two- or four-wire option to remotely select files. File select configurations are wire fault protected, meaning if any wire combination is broken, i.e., loose wire connection or a wire gets cut, the scanner will fault. Switching must occur in less than 800ms. Per NFPA, file selects must not be used to "blind" the scanner from seeing flame to obtain a start permissive.

FOUR WIRE CONFIGURATION: USES TWO RELAYS

File Select	SEL 3	SEL 2	SEL 1	SEL 0
A	**N.O. CLOSED to C**	**OPEN**	**N.O. CLOSED to C**	**OPEN**
B	**OPEN**	**N.C. CLOSED to C**	**N.O. CLOSED to C**	**OPEN**
C	**OPEN**	**N.C. CLOSED to C**	**OPEN**	**N.C. CLOSED to C**
D	**N.O. CLOSED to C**	**OPEN**	**OPEN**	**N.C. CLOSED to C**

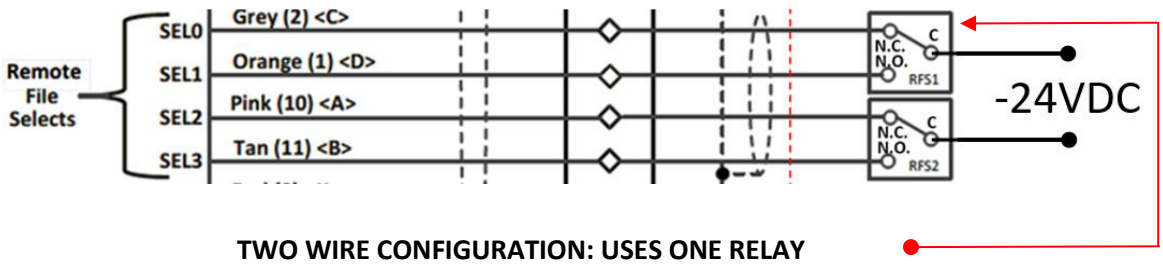

TWO WIRE CONFIGURATION: USES ONE RELAY

File Select	SEL 1	SEL 0
B	**N.O. CLOSED to C**	**OPEN**
C	**OPEN**	**N.C. CLOSED to C**

Note: Connect iScan®3 Flame Scanner SEL (File Select) wires via dry relays contacts (supplied by others) per above. Connect the common (C) side of the File Select relays to the -24 VDC return. Remote File Select must be enabled; otherwise, SEL inputs are ignored. Refer to the Remote File Select (RFS) section of **MNL-iScan Software** for instructions on setting up and using the Remote File Select feature

THIS DRAWING OWNED BY CHENTRONICS. IT IS CONDITIONALLY LOANED AND IS TO BE RETURNED UPON REQUEST. THE BORROWER BY RECEIVING IT HAS AGREED NOT TO REPRODUCE NOR COPY IT IN WHOLE OR IN PART NOR TO FURNISH INFORMATION FROM IT TO OTHERS NOR TO MAKE ANY USE OF IT THAT IS OR MAY BE INJURIOUS TO CHENTRONICS. FOR MORE INFORMATION, PLEASE CONTACT CHENTRONICS AT +1.607.334.5531.

5.0 Sighting The Scanner

DANGER

EXPLOSION HAZARD

Do not connect or disconnect when energized

DANGER

RISQUE D'EXPLOSION

Ne pas connecter ou débrancher lorsqué énérgé

Proper flame sighting is required for proper flame scanner detection and discrimination. The view through the sighting port should be the full flame, as illustrated below.

CORRECT

INCORRECT

Figure 9: iScan3 flame sighting example

THIS DRAWING OWNED BY CHENTRONICS. IT IS CONDITIONALLY LOANED AND IS TO BE RETURNED UPON REQUEST. THE BORROWER BY RECEIVING IT HAS AGREED NOT TO REPRODUCE NOR COPY IT IN WHOLE OR IN PART NOR TO FURNISH INFORMATION FROM IT TO OTHERS NOR TO MAKE ANY USE OF IT THAT IS OR MAY BE INJURIOUS TO CHENTRONICS. FOR MORE INFORMATION, PLEASE CONTACT CHENTRONICS AT +1.607.334.5531.

5.1 Ring of Light Scanner Status Display

Move the scanner while observing the LEDs on the back of the scanner. One-half of the LEDs will turn red and light up just 1 bar when no flame is detected; when running under the auto gain mode, LEDs on the other half will show purple color, and the LED bar will increase from a minimum of 1 to a maximum of 8. When the flame relay is energized, the LEDs will show green color, and the LED bar will increase from a minimum of 2 to a maximum of 8, as shown in Figure 10.

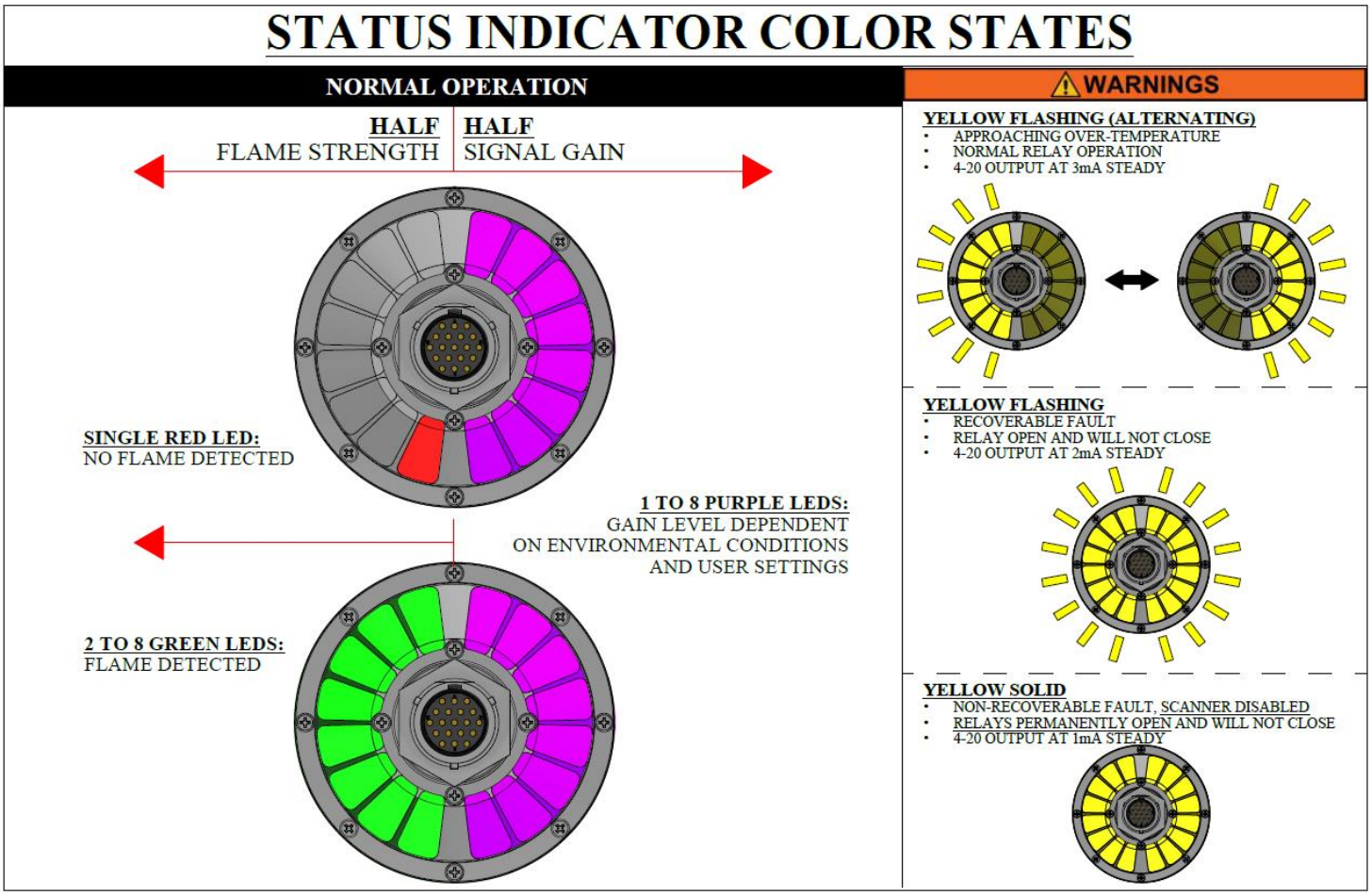

Figure 10: Status indicator LEDs

CAUTION

DO NOT use the scanner if the LEDs are all yellow and/or flashing yellow.
NE PAS utiliser le scanner si les voyants sont tous jaunes et clignotants.

THIS DRAWING OWNED BY CHENTRONICS. IT IS CONDITIONALLY LOANED AND IS TO BE RETURNED UPON REQUEST. THE BORROWER BY RECEIVING IT HAS AGREED NOT TO REPRODUCE NOR COPY IT IN WHOLE OR IN PART NOR TO FURNISH INFORMATION FROM IT TO OTHERS NOR TO MAKE ANY USE OF IT THAT IS OR MAY BE INJURIOUS TO CHENTRONICS. FOR MORE INFORMATION, PLEASE CONTACT CHENTRONICS AT +1.607.334.5531.

5.2 Cleaning the Lens

The only maintenance that may be required is periodic cleaning of the quartz glass lens.

Step 1: For cleaning in a hazardous area, remove the camlock by unscrewing (counter-clockwise) from the stainless-steel body to access the lens.

Step 2: Clean the lens with a clean, damp, lint-free cloth

Step 3: Replace the black camlock and reinstall the scanner.

CAUTION

Do not remove the lens from the scanner housing. Doing so may damage the scanner and will void the warranty.

N'ouvrez JAMAIS le boîtier du scanner. Cela pourrait endommager le scanner et annuler la garantie

6.0 Warranty Instructions

For warranty-related inquiries, please get in touch with Chentronics® at TEL: +1.607.334.5531 or info@chentronics.com

7.0 Maintenance and Special, "X," Conditions of Use

- The equipment must only be used in an area with a low impact risk.
- The equipment must be used in an area free from falling debris.
- The equipment must be placed in an area with no mechanical hazard.
- The equipment must not be subjected to human abuse.
- The equipment must only be wiped/cleaned with a damp cloth.

8.0 Technical Support

For technical support beyond the scope of this Installation and Operation Manual, please get in touch with Chentronics® at TEL: +1.607.334.5531 or info@chentronics.com